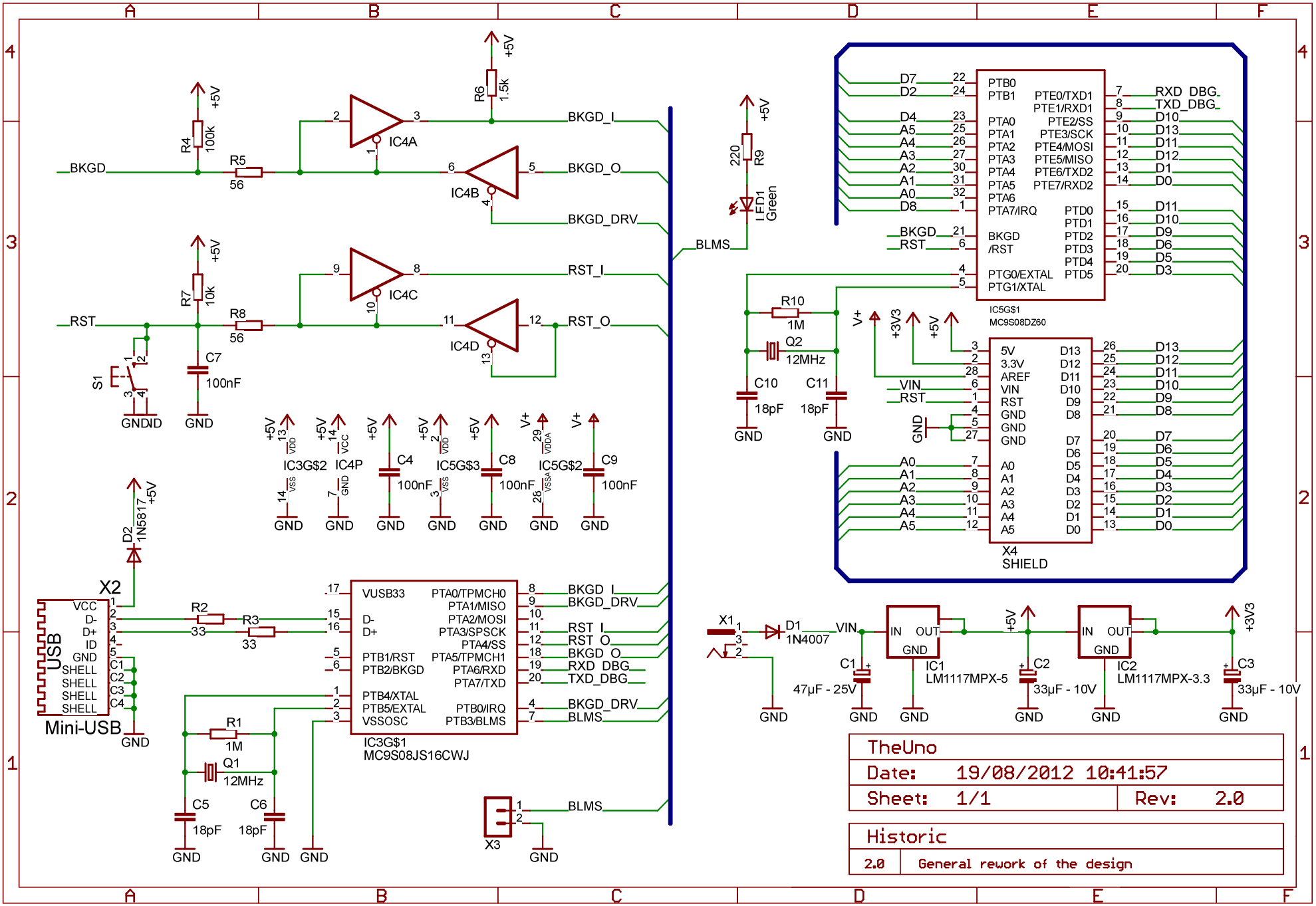
BKGD
R4 100k
R5 56
IC4A
IC4B
R6 1.5k
+5V
BKGD_I
BKGD_O
BKGD_DRV
RST
R7 10k
R8 56
IC4C
IC4D
RST_I
RST_O
S1
C7 100nF
GND
D2 1N5817
X2
VCC
D-
D+
ID
GND
SHELL
Mini-USB
R2 33
R3 33
VUSB33
PTA0/TPMCH0
PTA1/MISO
PTA2/MOSI
PTA3/SPSCK
PTA4/SS
PTA5/TPMCH1
PTA6/RXD
PTA7/TXD
PTB1/RST
PTB2/BKGD
PTB4/XTAL
PTB5/EXTAL
VSSOSC
PTB0/IRQ
PTB3/BLMS
IC3G$1
MC9S08JS16CWJ
BKGD_I
BKGD_DRV
RST_I
RST_O
BKGD_O
RXD_DBG
TXD_DBG
BLMS
R1 1M
Q1 12MHz
C5 18pF
C6 18pF
X3
IC3G$2
IC4P
IC5G$3
IC5G$2
C4 100nF
C8 100nF
C9 100nF
R9 220
LED1 Green
PTB0
PTB1
PTA0
PTA1
PTA2
PTA3
PTA4
PTA5
PTA6
PTA7/IRQ
BKGD /RST
PTG0/EXTAL
PTG1/XTAL
PTE0/TXD1
PTE1/RXD1
PTE2/SS
PTE3/SCK
PTE4/MOSI
PTE5/MISO
PTE6/TXD2
PTE7/RXD2
PTD0
PTD1
PTD2
PTD3
PTD4
PTD5
IC5G$1
MC9S08DZ60
R10 1M
Q2 12MHz
C10 18pF
C11 18pF
V+
+3V3
VIN
5V
3.3V
AREF
RST
GND
D13
D12
D11
D10
D9
D8
D7
D6
D5
D4
D3
D2
D1
D0
A0
A1
A2
A3
A4
A5
X4
SHIELD
X1
D1 1N4007
IC1
LM1117MPX-5
IN
OUT
C1 47µF - 25V
C2 33µF - 10V
IC2
LM1117MPX-3.3
C3 33µF - 10V
TheUno
Date: 19/08/2012 10:41:57
Sheet: 1/1
Rev: 2.0
Historic
2.0 General rework of the design